PRE-MOTION

SMALL 2,5m x 2,5m

MOTION BECOMES emotion

Pre-Motion Presentation Systems B.V · Faradaystraat 16 · 6718 XT Ede · The Netherlands

info@pre-motion.nl · pre-motion.com · +31 (0)318 505 780

PRE-MOTION

MEDIUM 2,5m x 3,5m

MO TION BECOMES emotion

Pre-Motion Presentation Systems B.V · Faradaystraat 16 · 6718 XT Ede · The Netherlands

info@pre-motion.nl · pre-motion.com · +31 (0)318 505 780

PRE-MOTION

LARGE (rectangular) 3,5m x 4,5m

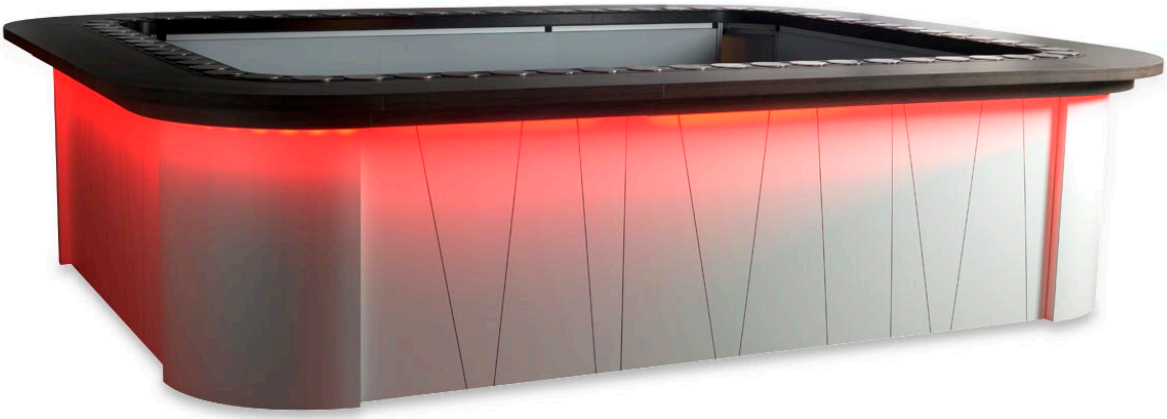

PRE-MOTION

LARGE (Long) 2,5m x 5,5m

MOTION BECOMES emotion

Pre-Motion Presentation Systems B.V · Faradaystraat 16 · 6718 XT Ede · The Netherlands

info@pre-motion.nl · pre-motion.com · +31 (0)318 505 780

PRE-MOTION

X-LARGE (rectangular) 4,5m x 4,5m

PRE-MOTION

X-LARGE (Long) 2,5m x 6,5m

MOTION BECOMES emotion

Pre-Motion Presentation Systems B.V · Faradaystraat 16 · 6718 XT Ede · The Netherlands

info@pre-motion.nl · pre-motion.com · +31 (0)318 505 780

PRE-MOTION

Elements

PRE-MOTION

Hidden Entrance

PRE-MOTION

Easy transport & Storing

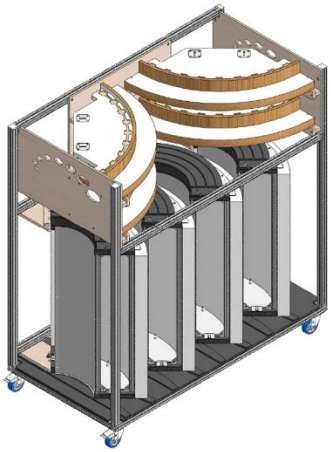

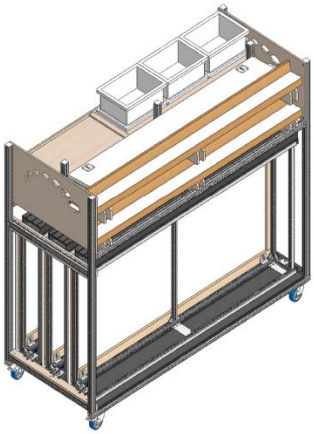

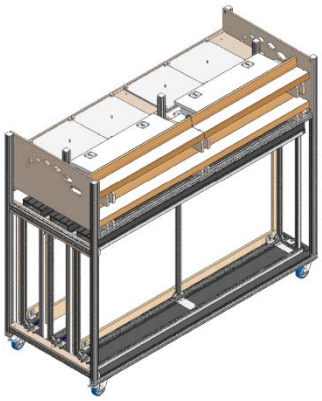

Trolly 1: (167 x 85 x 180cm)

Trolly 2: (213 x 85 x 180 cm)

Trolly 3: (213 x 85 x 180 cm)

For Small & Medium size: Trolly 1 & 2
For all sizes up to X-Large: Trolly 1,2 &3

PRE-MOTION

Alternative Use: Long shape – widht 150 cm

With X-Large elements up to 150 cm x 850 cm